PRODUCT SPECIFICATION

Drawings

Category	Unit	Model Name		
		Capacity (kW)		
		5.5	7.0	9.0
1 Phase Model 220 ~ 240V, 1Ø, 50Hz	Outdoor Unit	HU051MR U44	HU071MR U44	HU091MR U44
	Indoor Unit	HN0916M NK4		

HU051MR U44 / HU071MR U44 / HU091MR U44

[Unit : mm]

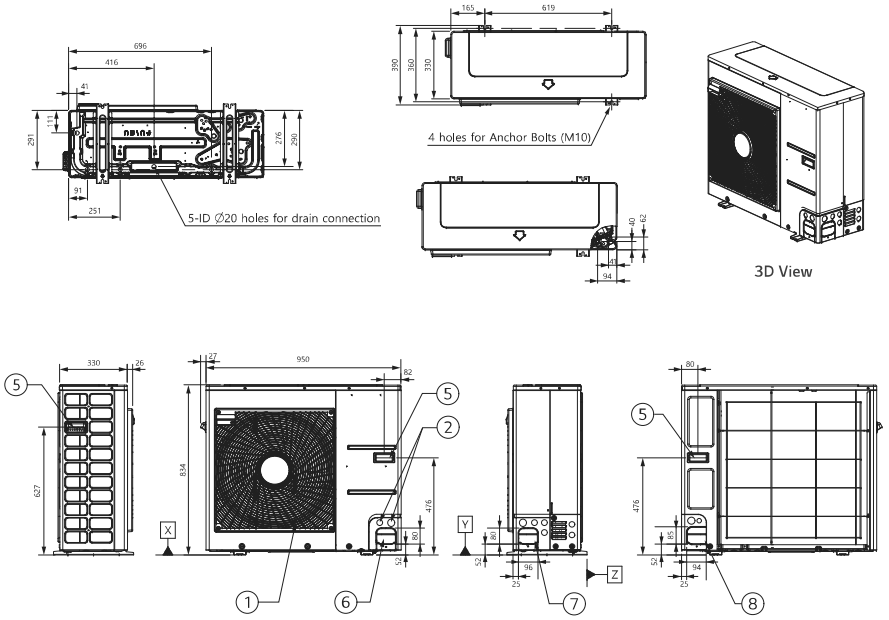

No.	Part Name	Description
1	Air Outlet	-
2	Power and Communication Cable Hole	-
3	Gas Pipe Connection	Flare joint
4	Liquid Pipe Connection	Flare joint
5	Handle	-
6	Pipe Routing Hole (front)	-
7	Pipe Routing Hole (side)	-
8	Pipe Routing Hole (back)	-

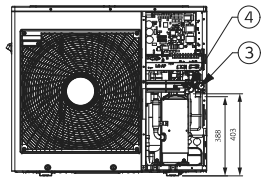

Piping Connection Port

HN0916M NK4

[Unit : mm]

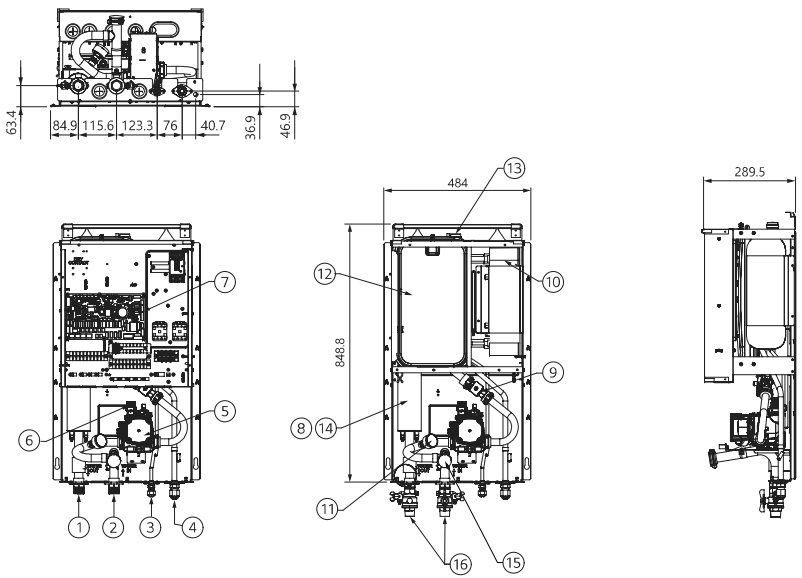

No.	Part Name	Description
1	Leaving Water Pipe	Male PT 1 inch
2	Entering Water Pipe	Male PT 1 inch
3	Refrigerant Pipe	Ø9.52 (mm)
4	Refrigerant Pipe	Ø15.88 (mm)
5	Water Pump	GROUNDFOS UPM3K 20-75 CHBL
6	Safety Valve	Open at water pressure 3bar
7	Control Box	PCB and terminal blocks
8	Thermal Switch	Cut-off power input to electric heater at 90°C (manual return at 55°C)
9	Flow Sensor	SIKA VVX20 5-80LPM
10	Plate Heat Exchanger	Heat exchange between refrigerant and water
11	Pressure Gage	Indicates circulating water pressure
12	Expansion Tank	Absorbing volume change of heated water
13	Air Vent	Air purging when charging water
14	Electric Heater	6kW
15	Strainer	Filtering and stacking particles inside circulating water
16	Shut-off Valve	To drain or to block water, when pipe connecting