PRODUCT SPECIFICATION

Drawings

Category	Unit	Model Name		
		Capacity (kW)		
		12.0	14.0	16.0
1 Phase Model 220 ~ 240V, 1Ø, 50Hz	Outdoor Unit	HU121MRB U30	HU141MRB U30	HU161MRB U30
	Indoor Unit	HN1600MB NK0		
3 Phase Model 380 ~ 415V, 3Ø, 50Hz	Outdoor Unit	HU123MRB U30	HU143MRB U30	HU163MRB U30
	Indoor Unit	HN1600MB NK0		

HU121MRB U30 / HU141MRB U30 / HU161MRB U30
HU123MRB U30 / HU143MRB U30 / HU163MRB U30

[Unit : mm]

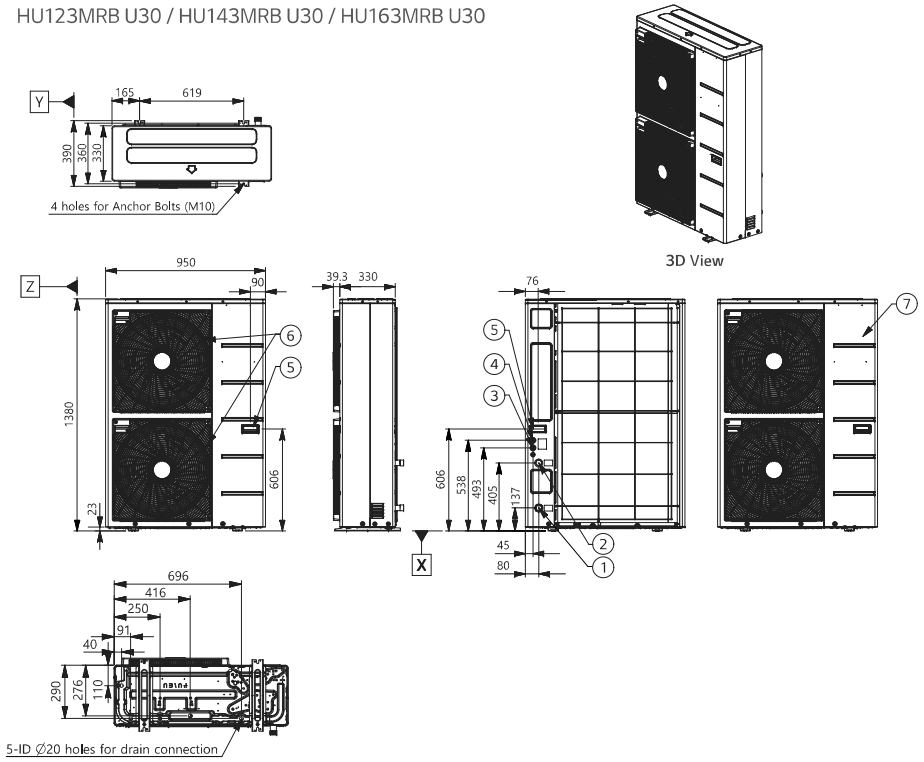

No.	Part Name	Description
1	Entering Water Pipe	Male PT 1 inch
2	Leaving Water Pipe	Male PT 1 inch
3	Unit Power	Power Cable Hole
4	Low Voltage	Communication Cable Hole
5	Handle	-
6	Air Outlet	-
7	Control Box	PCB and terminal blocks

HN1600MB NK0

[Unit : mm]

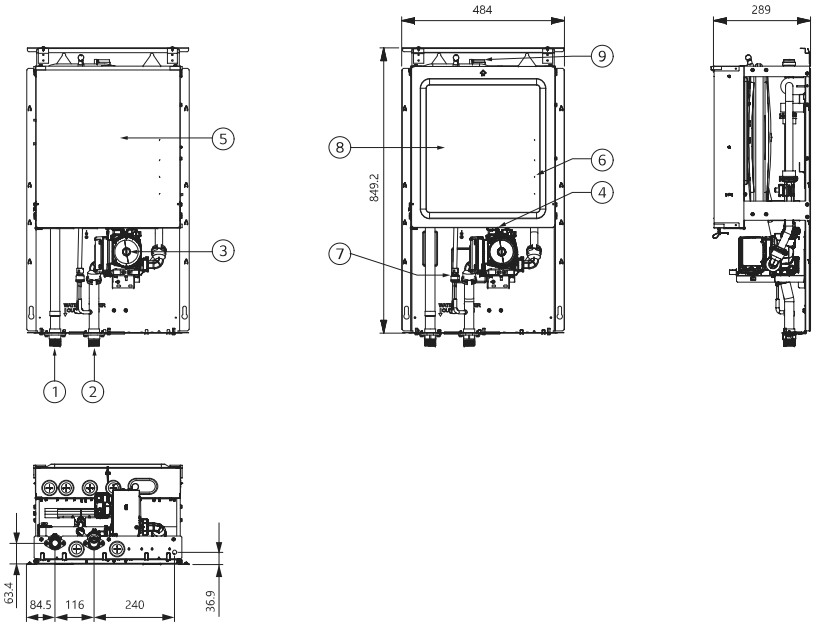

No.	Part Name	Description
1	Leaving Water Pipe	Male PT 1 inch
2	Entering Water Pipe	Male PT 1 inch
3	Water Pump	GRUNDFOS UPML GEO 20-105 CHBL
4	Safety Valve	Open at water pressure 3 bar
5	Control Box	PCB and Terminal blocks
6	Flow Sensor	SIKA VVX20 5-80 LPM
7	Pressure Sensor	SENSATA 2HMP3-04W 0-2MPa
8	Expansion Tank	Absorbing volume change of heated water
9	Air Vent	Air purging when charging water